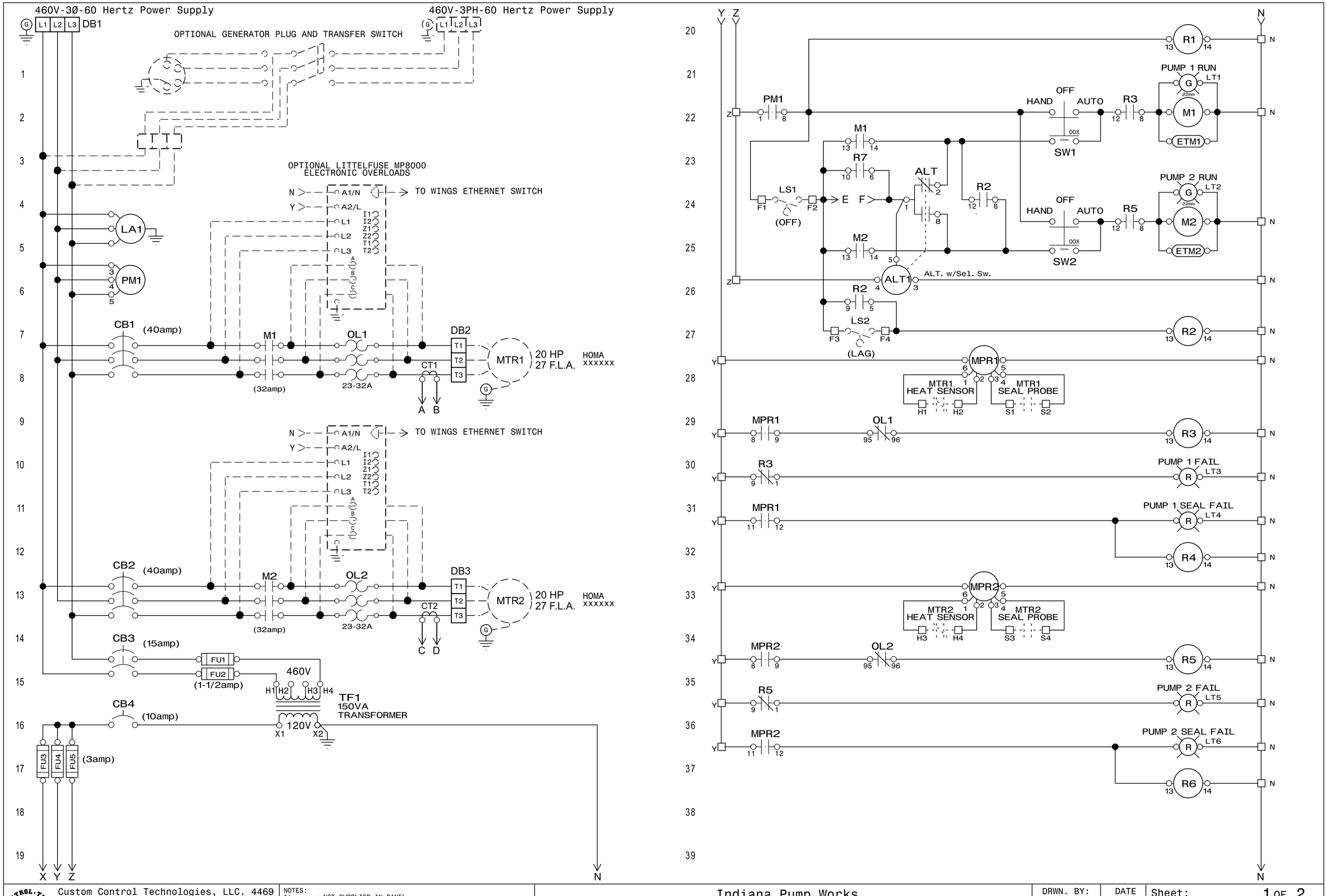

Custom Control Technologies, LLC. 4469 Funk Rd Shelby, OH 44875 (419)342-5593

THIS DRAWING IS THE PROPERTY OF CUSTOM CONTROL TECHNOLOGIES, LLC., IT, AND/OR THE KNOWLEDGE CONTAINED MAY NOT BE COPIED OR REPRODUCED WITHOUT THE WRITTEN PERMISSION OF CUSTOM CONTROL TECHNOLOGIES, LLC.

NOTES:
1) ----- = NOT SUPPLIED IN PANEL
2) PANEL MAIN DISCONNECT SUPPLIED BY INSTALLER
3) FLOAT SWITCHES MUST BE RATED A MINIMUM 3AMPS @ 120 VOLTS
4) USE 60°C RATED COPPER WIRE ONLY FOR FIELD CONNECTIONS
5) TORQUE ALL FIELD WIRING TERMINAL TO RATINGS SUPPLIED WITHIN

Indiana Pump Works
OmniSite WINGs Panel
Duplex 460V 3Ø 20hp Pump Control Panel

DRWN. BY:	DATE
J. Prosser	5/4/26
Rev.:	

Sheet: 1 OF 2

DRAWING NO.
B-IPW-WINGs Sample

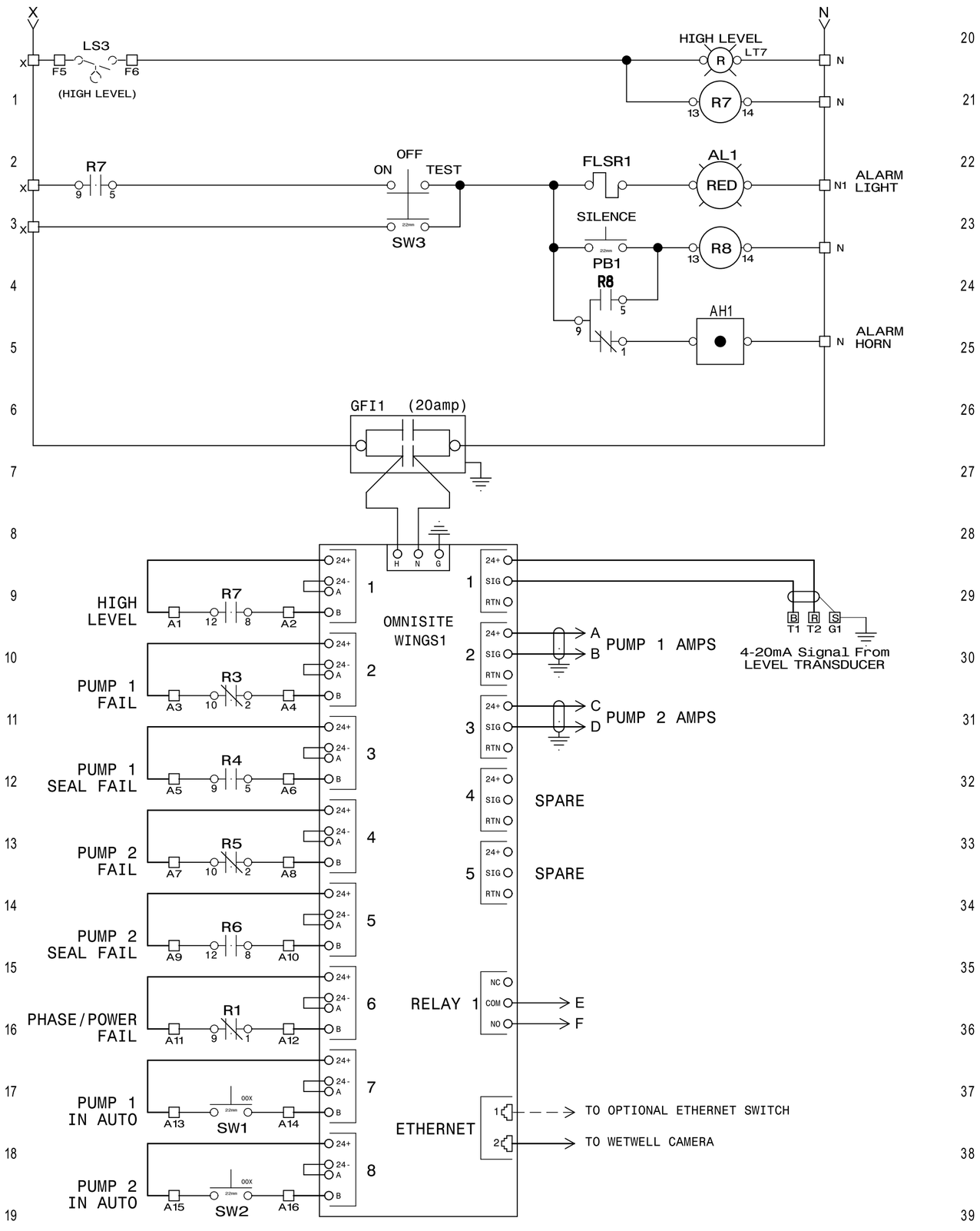

CONTROL WIRING
RED = AC CONTROL
WHITE = AC NEUTRAL
BLUE = DC CONTROL
WHITE/BLUE = DC Neutral
YELLOW = EXTERNAL SOURCE
GREEN = GROUND

Custom Control Technologies, LLC. 4469
Funk Rd Shelby, OH 44875 (419)342-5593

THIS DRAWING IS THE PROPERTY OF CUSTOM CONTROL TECHNOLOGIES, LLC., IT, AND/OR THE KNOWLEDGE CONTAINED MAY NOT BE COPIED OR REPRODUCED WITHOUT THE WRITTEN PERMISSION OF CUSTOM CONTROL TECHNOLOGIES, LLC.

NOTES:
1)----- = NOT SUPPLIED IN PANEL
2) PANEL MAIN DISCONNECT SUPPLIED BY INSTALLER
3) FLOAT SWITCHES MUST BE RATED A MINIMUM 3AMPS @ 120 VOLTS
4) USE 60°C RATED COPPER WIRE ONLY FOR FIELD CONNECTIONS
5) TORQUE ALL FIELD WIRING TERMINAL TO RATINGS SUPPLIED WITHIN

Indiana Pump Works
OmniSite WINGs Panel
Duplex 460V 3Ø 20hp Pump Control Panel

DRWN. BY:	DATE
J. Prosser	5/4/26
Rev.:	

Sheet: 2 OF 2

DRAWING NO.
B-IPW-WINGs Sample